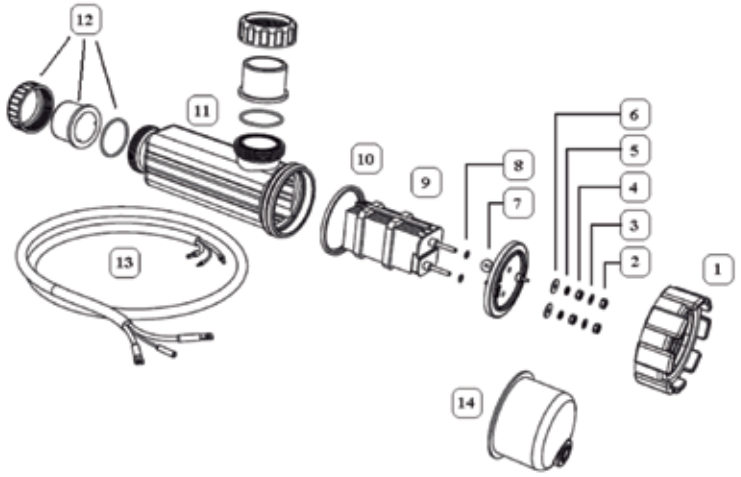

CELULA
DESPIECE / SPARE PARTS

1 ref. ROSCARP (RP10/RP15/RP20/RP25) – rosca célula / cell thread
ROSCARP50 (RP50) – rosca célula / cell thread
2 ref. TRM6I (RP10/RP15/RP20/RP25) – tuerca / lock nut (6mm)
TRM8I (RP35/RP50) – tuerca / lock nut (8mm)
3 ref. ARM6I (RP10/RP15/RP20/RP25) – arandela / washer (6mm)
ARM8I (RP35/RP50) – arandela / washer (8mm)
4 ref. TRM6I (RP10/RP15/RP20/RP25) – tuerca / lock nut (6mm
TRM8I (RP35/RP50) – tuerca / lock nut (8mm)
5 ref. ARG6I (RP10/RP15/RP20/RP25) – arandela grower / grower washer (6mm)
ARG8I (RP35/RP50) – arandela grower / grower washer (8mm)
6 ref. ARM6I-P (RP10/RP15/RP20/RP25) – arandela plana / flat washer (6mm)
ARM8I-P (RP35/RP50) – arandela plana / flat washer (8mm)
7 ref. TAZRP (RP10/RP15/RP20/RP25) – tapa célula /cover cell
TAZRP35 (RP35) – tapa célula / cover cell
TAZRP50 (RP50) – tapa célula / cover cell
8 ref. JTRP – junta tórica / ring gasket
9 ref. RP10/1 – célula / cell RP15/1 – célula / cell RP20/1 – célula / cell
RP25/1 – célula / cell RP35/1 – célula / cell RP50/1 – célula / cell
10 ref. GIPRP (RP10/RP15/RP20/RP25/RP35) – junta de goma / rubber gasket
GIPRP50 (RP50) – junta de goma / rubber gasket
11 ref. RP-15/1 (RP10/RP15) – vaso célula / housing cell RP/1 (RP20/RP25/RP35) – vaso célula / housing cell
RP-50 (RP50) – vaso célula / housing cell
12 ref. CRRP (RP10/RP15/RP20/RP25/RP35) – racords / racords
13 ref. RP10/151,5M-2 – RP10/153M-2 – cable célula / cell wire RP20/251,5M-2 - RP20/253M-2 – cable célula / cell wire
RP351,5M-2 - RP353M-2 – cable célula / cell wire RP501,5M-2 - RP503M-2 – cable célula / cell wire
14 ref. C-RP (RP10/RP15/RP20/RP25/RP35) – protección célula / cell protecction
C-RP50 (RP50) – protección célula / cell protecction